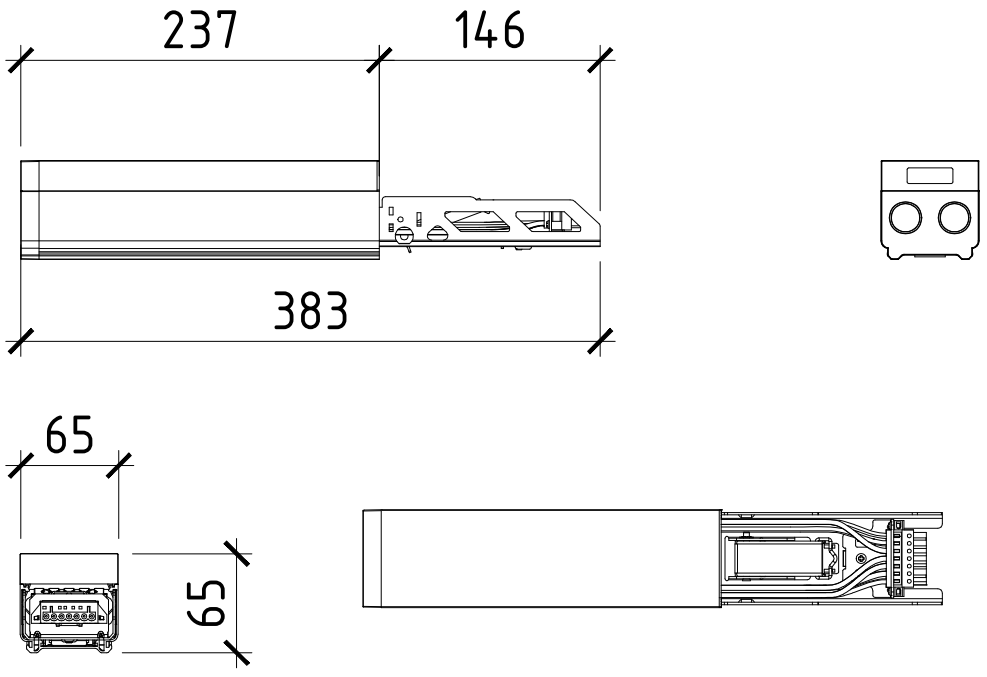


| | | | | | | |
|---|---|---|---|---|---|---|
| | | | | | | Calex Professional |
| | | | | | | |
| | | | | | | Draagprofielen nieuwe lichtlijnen, accessoires nieuwe lichtlijnen |
| | | | | | | |
| Rev. | Aan.wz | Blad | Doc.nr | Paraaf | Datum | |
| Getekend | | | | | | 11001000300, 22001000300 |
| Gecontr. | | | | | | |
| | | | | | | Calex Livorum NXS IP20 Startprofiel 237mm |
| | | | | | | |
| | | | | | | |
| | | | | | | |

| Fase | Blad | Bladen |
|---|---|---|
| U0 | 1 | |

CALEX PROFESSIONAL

Formaat: A4